Serial Number: IFB FQ15090/GG
Date of Issue: May 20, 2015
IFB Due Date: July 15, 2015

WASHINGTON METROPOLITAN AREA TRANSIT AUTHORITY
600 FIFTH STREET, N.W.
WASHINGTON, D.C. 20001

June 25, 2015

AMENDMENT NO. 2
TO
REQUEST FOR PROPOSALS
FOR
REHABILITATION OF WMATA PARKING GARAGES AT SHADY GROVE (NORTH), FRANCONIA-SPRINGFIELD (EAST), GROSVENOR-STRATHMORE AND COLLEGE PARK
FQ15090/GG

TO WHOM IT MAY CONCERN:

The Invitation for Bid for IFB FQ15090/GG requesting Bids for the above project is hereby changed in part as listed below.

1. Volume 1 – Bidding and Contracting Requirements

Delete the following pages and in lieu thereof substitute the accompanying pages:

DELETE	SUBSTITUTE	DESCRIPTION
p.4. Letter to Bidders	p.4 Letter to Bidders	Revised
p.14 Invitation for Bids	p.14 Invitation for Bids	Revised
p.27 Clause 30. Basis for Award	P.27 Clause 30. Basis for Award	Revised
p.55 Note 8	P.55 Note 8	Revised
p.123 Clause 1.75 Availability of funds for the next fiscal years	p.123 Clause 1.75 Availability of funds for the next fiscal years	Revised
p.156 Clause 2.15 Safety Requirements	P.156 Clause 2.15 Safety Requirements	Revised
pp. 273-276 Appendix G, Safety and Security Certification Process	N/A	Deleted

2. Volume 2 – Technical Specifications

DELETE	SUBSTITUTE	DESCRIPTION
Section 07190, Water Repellents	Section 07190, Water Repellents	Revised

3. Volume 3 – Drawings

DELETE	SUBSTITUTE	DESCRIPTION
A11P-S-001 (M1269-25)	A11P-S-001 (M1269-25)	Revised
E09P-S-001 (M1269-97)	A15P-S-001 (M1269-97)	Revised
E09P-S-001 (M1269-174)	E09P-S-001 (M1269-174)	Revised
J03P-S-001 (M1269-213)	J03P-S-001 (M1269-213)	Revised
S-517 (M1269-264)	S-517 (M1269-264)	Revised

4. Acknowledgment

Bidders are required to acknowledge receipt of this Amendment on Bid Form in the spaces provided. Failure to acknowledge all Amendments may cause the Proposal to be considered not responsive to the RFP, which would require rejection of the Proposal.

Richard Owens
Contracting Officer
Office of Procurement

* * * * *

Site Visit

WMATA will conduct a site visit at Shady Grove parking garage. Attendees must provide their own transportation. Attendees must be escorted by WMATA.

The Site Visit will start on Monday, June 1, 2015, 2.00 PM (14:00). Meeting point will be the north side outside of Shady Grove parking garage, located at 15903 Somerville Drive, Rockville, MD 20855.

Attendees will be required to sign in at the Site Visit.

Attendees that have a current WMATA Contractor ID shall display their ID and bring PPE and WMATA approved safety vest. Attendees not holding WMATA Contractor ID with PPE and vest should specifically identify themselves to the WMATA escorts.

Individuals that plan to attend the Site Visit are requested but not required to send an email by COB on May 28, 2015 to ggufranova@wmata.com, with their name, title, company name, mailing address, telephone, and email for each attendee.

Pre-Award Information: Shall not be submitted with the bid. After the bid opening, only the Apparent Low Bidder will be requested to submit Pre-Award Information.

Bids Due: July 15, 2015 by 2:00 PM (14:00) and shall be delivered to WMATA, Office of Procurement and Materials, Room 3C-02, 600 Fifth Street, NW, Washington, DC 20001. Bids will be publicly opened and read aloud in the WMATA Meeting Room, Lobby Level, 600 Fifth Street, NW, Washington, DC 20001. **AM2**

Bidders are cautioned to not take exceptions or qualify their bid. Any questions regarding the solicitation should be made in writing to the Contract Administrator, Guzel Gufranova, on ggufranova@wmata.com no later than seven (7) business days prior to the bid opening. Please carefully review the Notice to Bidders of the IFB. The Notice to Bidders addresses common problems found in previous bids that may cause bid rejection. **AM1**

A Virginia Contractor License

All bidders shall have a Virginia Class A contractor license. http://www.dpor.virginia.gov/ . This is a Commonwealth of Virginia law and WMATA complies with the law.

Basis of Award

A single contract for all items will be awarded to the lowest responsive and responsible bidder.

Type of Contract:

Firm fixed price contract for the items in the Unit Price Schedule.

IFB Volumes

Volume 1, Bidding and Contracting Requirements
Volume 2, Technical Specifications
Volume 3, Drawings

IFB availability:

Once the IFB is issued it will be posted on the WMATA website at

INVITATION FOR BIDS

DATE OF INVITATION: May 20, 2015

PROJECT DESCRIPTION: IFB FQ15090/GG
Rehabilitation of WMATA Parking Garages at Shady Grove (North), Franconia-Springfield (East), Grosvenor-Strathmore and College Park

SEALED BIDS in singular for the work described herein will be received at or before 2:00 PM on **July 15, 2015** at the Washington Metropolitan Area Transit Authority, in the Meeting Room at the Lobby Level, 600 Fifth Street, N. W., Washington, DC 20001. **AM2**

INFORMATION REGARDING BIDDING MATERIAL, BID GUARANTEE AND BONDS:

Bidding Material:

Bid Form
Representations and Certifications
Unit Price Schedule
Bid Bond (see Note #l)
Appendix B: Disadvantaged Business Enterprise (DBE) (Applies only if bid price is over $500,000)

A bid guarantee as herein specified is required for a bid price in excess of $100,000, and the penal amount shall be 5 percent of the bid price. If the guarantee is submitted in the form of a bid bond, the bid bond penalty may be expressed in terms of a percentage of the bid price or may be expressed in dollars and cents.

Bonds: As required by the Specifications.

DESCRIPTION OF WORK:

Rehabilitation of WMATA Parking Garages at Shady Grove (North), Franconia-Springfield (East), Grosvenor-Strathmore and College Park

BID MUST SET FORTH FULL, ACCURATE AND COMPLETE INFORMATION AS REQUIRED BY THIS INVITATION FOR BIDS, INCLUDING ATTACHMENTS.

29. Award - Single Award for All Items

The Authority will make a single award for all line items in the Schedule unless specified elsewhere.

30. Basis for Award

a. The Authority will award a contract to the lowest responsive and responsible bidder whose bid conforms to this Invitation for Bids is determined to be the most advantageous to the Authority, considering only price and price-related factors included in the IFB.

b. If, after receipt of the bids, the Contracting Officer determines that adequate price competition does not exist, the Offeror shall provide certified cost or pricing data as requested by the Contracting Officer.

c. Initial Contract Award

1. The Initial Contract Award shall include the Base Work Unit Price Schedule – Shady Grove (North) Parking Garage, Franconia-Springfield (East) Parking Garage, Grosvenor-Strathmore Parking Garage

2. The Initial Contract Award may include Option 1 College Park Parking Garage:

a. If the Initial Contract Award did not include Option 1, the Contracting Officer may exercise this Option not later than 810 calendar days after the Initial NTP date. **AM2**

d. The Authority shall have no obligation beyond the Initial Contract Award

31. Type of Contract

The Authority contemplates award of a firm fixed price contract resulting from this solicitation.

32. Brand Name or Equal

a. If items called for by this Invitation for Bid have been identified in the Schedule by a "brand name or equal" description, such identification is intended to be descriptive, but not restrictive, and is to indicate the quality and characteristics of products that will be satisfactory. Bids offering "equal" products including products of the brand name manufacturer other than the one described by brand name will be considered for award if such products are clearly identified in the Bids and are determined by the Authority to meet fully the salient characteristics requirements in the Invitation for Bids.

b. Unless the Bidder clearly indicates in his Bid that he is offering an "equal" product, his Bid shall be considered as offering a brand name product referenced in the Invitation for Bid.

c. (1) If the Bidder proposes to furnish an "equal" product, the brand name, if any, of the product to be furnished in the space provided in the Invitation for Bid, or such product shall be otherwise clearly identified in the Bid. The evaluation of Bids and the determination as to equality of the product offered shall be the responsibility of the Authority and will be based on information reasonable available to the Department of Procurement.

CAUTION TO BIDDERS. WMATA is not responsible for locating or securing any information which is

4. Bids will be evaluated on the basis of the Total Bid Price (Base Work plus Option 1). The Authority has the right to exercise Option 1, College Park Parking Garage, within 810 calendar days from the initial NTP.

3. Any bid which is materially unbalanced as to prices for the various items may be rejected as non-responsive. A materially unbalanced bid is one which is based on prices which are materially overstated for other work.

4. Unit Prices - The unit prices shall constitute full compensation for all costs of performance under this contract, including but not limited to: labor, materials, equipment, supervision, quality control, testing, safety, transportation, project management, overhead, profit, bonds and other items necessary to complete the work.

5. All extensions of the unit prices shown will be subject to verification by the Authority. In case of variation between the unit prices and the extension, the unit price will be considered the bid.

6. The Bidder must furnish a Bid Guarantee in accordance with the Invitation for Bid for the Total Bid Price for Base Work plus Options.

7. Performance and Payment Bonds - The Performance and Payment Bonds shall be based upon the Total Bid Price for Base Work plus Options.

8. The Bidder is advised that this contract contains Davis-Bacon provisions. The Contractor will be required to submit certified payrolls on a weekly basis. Also, the Authority will monitor compliance by performing Labor Standards Interviews of the labor force. The Authority will hold retainage in a sufficient amount as may be considered necessary for any underpayment of wages and/or fringes until they are fully resolved in accordance with the Labor Provisions of the contract.

8. Funds are not presently available for performance under this contract beyond the fiscal year which ends June 30, 2016. The Authority's obligation for performance of this contract beyond that date is contingent upon the availability of funds from which payment for contract purposes can be made. No legal liability on the part of the Authority for any payment may arise for performance under this contract until funds are made available to the Contracting Officer for performance and until the Contractor receives notice of availability, to be confirmed in writing, by the Contracting Officer. Any option exercised by the Authority which will be performed in whole or in part in a subsequent fiscal year is subject to availability of funds in the subsequent fiscal year and will be governed by the terms of this provision. **AM2**

1.72 Recovered Materials **-**

The contractor agrees to comply with all the requirements of Section 6002 of the Resource Conservation and Recovery Act (RCRA), as amended (42 U.S.C. 6962), including but not limited to the regulatory provisions of 40 CFR Part 247, and Executive Order 12873, as they apply to the procurement of the items designated in Subpart B of 40 CFR Part 247.

1.73 Contracts Involving Federal Privacy Act Requirements **-**

The following requirements apply to the Contractor and its employees that administer any system of records on behalf of the Federal Government under any contract:

(1) The Contractor agrees to comply with, and assures the compliance of its employees with, the information restrictions and other applicable requirements of the Privacy Act of 1974, 5 U.S.C. § 552a. Among other things, the Contractor agrees to obtain the express consent of the Federal Government before the Contractor or its employees operate a system of records on behalf of the Federal Government. The Contractor understands that the requirements of the Privacy Act, including the civil and criminal penalties for violation of that Act, apply to those individuals involved, and that failure to comply with the terms of the Privacy Act may result in termination of the underlying contract.

(2) The Contractor also agrees to include these requirements in each subcontract to administer any system of records on behalf of the Federal Government financed in whole or in part with Federal assistance provided by FTA'

1.74 Pre-employment Criminal Background Check Requirement -

WMATA requires that all Contractor employees and candidates for employment undergo and pass criminal background screenings before being eligible to work on WMATA property and facilities. Contractor employees and candidates who pass the background screenings are eligible to enter WMATA property once WMATA issues them a contractor badge. Contractor employees and candidates who do not authorize background screenings or whose background screenings are unsatisfactory will not be granted contractor badges or access to WMATA property. Contractor must also complete Appendix H.

1.75 Availability of Funds For the Next Fiscal Years

Funds are not presently available for performance under this contract beyond the fiscal year which ends June 30, 2016**.** The Authority's obligation for performance of this contract beyond that date is contingent upon the availability of funds from which payment for contract purposes can be made. No legal liability on the part of the Authority for any payment may arise for performance under this contract until funds are made available to the Contracting Officer for performance and until the Contractor receives notice of availability, to be confirmed in writing, by the Contracting Officer. Any option exercised by the Authority which will be performed in whole or in part in a subsequent fiscal year is subject to availability of funds in the subsequent fiscal year and will be governed by the terms of this provision. **AM2**

1.76 Living Wage

This contract is subject to the Authority's Living Wage Policy and implementing regulations. The Living Wage provision is required in all contracts for services (including construction) awarded in an amount that exceeds $100,000 in a 12-month period.

2.13.3 NOT USED

2.14 NOT USED

2.15 SAFETY REQUIREMENTS

A. The Contractor shall be responsible for ensuring compliance with the most stringent provisions of the applicable occupational safety and health statutes and regulations of the District of Columbia, State of Maryland, Commonwealth of Virginia or political subdivision in which the work is being performed, and the Department of Labor OSHA standards. In addition, the Contractor must comply with the following documents: the WMATA Construction Safety and Environmental Manual; the WMATA System Safety Program Plan; the Metrorail Safety Rules and Procedures Handbook (for contracts in which work is performed on, or interfaces with the Metrorail System); and the Department Bus Service Employee Handbook (for contracts in which work is performed on, or interfaces with the Metrobus System or facilities); Consolidated Plan prepared by WMATA for each Bus Division and Rail Yard in order to minimize the potential for pollutant discharge to the environment; the National Institute for Occupational Safety and Health (NIOSH) guidelines; the American Conference of Governmental Industrial Hygienists (ACGIH) guidelines; the American National Standards Institute (ANSI) guidelines; and the U.S. Army Corps of Engineers Safety and Health Requirements Manual. The contractor shall also be responsible for compliance with applicable National Fire Protection Association (NFPA) Standards 13, 14, 24, 25 and 130. Further, the Contractor shall ensure that all methods of performing the work do not involve danger to the personnel employed thereon, the public, or private property, whether or not these methods are cited or indicated in the Contract documents. Should charges of violation of any of the above be issued to the Contractor in the course of the work, a copy of each charge shall be immediately forwarded to WMATA's Representative.

B. The Contractor shall employ and assign to the work Safety Superintendent(s) and a separate certified First Aid Attendant, based on the contract need. At the site of the work, a first aid station shall be established and fully equipped to meet the needs of the anticipated work force. In no event shall work at the site be performed until the approved Safety Superintendent and First Aid Attendant are on duty at the site. The following category Safety Superintendent shall be provided by the Contractor:

Category II. - The Safety Superintendent may be the project foreman or an employee who is on- site at all times while work is being performed, and who has the added duty of supervising the safety of persons, equipment, and property affected by contract work. Separate First Aid Attendant will not be required for this Project. **AM2**

Any selected Safety Superintendent shall have specialized training and experience in construction safety supervision and have a thorough knowledge of all OSHA regulations. Safety Superintendent shall have the ability to develop and conduct safety training courses. Safety Superintendent shall be familiar with industrial hygiene equipment and testing as required for the protection of all personnel and the public. The Safety Superintendent and First Aid Attendant shall be responsible for First Aid and CPR at the site and must have current First Aid and CPR certificates. Employees expected to render First Aid or CPR

Appendix G – Safety and Security Certification Process

Not Applicable **AM2**

This Page is left intentionally blank

This Page is left intentionally blank

This Page is left intentionally blank

SECTION 07190

WATER REPELLENTS

PART 1 GENERAL

1.01 SUMMARY

A. The work to be performed includes furnishing all labor, materials, and equipment necessary to apply the specified surface treatment to horizontal concrete surfaces of elevated concrete decks, with the exception of those on the top level.

B. The coating will be applied to the ramps leading to the elevated concrete decks with the exception of the top level.

C. Section Includes:
   1. Alkylalkoxysilane penetrating water repellent sealer for exterior above grade horizontal or vertical surfaces as scheduled.

1.02 RELATED SECTIONS:

A. Section 01400 – Quality Control and Assurance Requirements

B. Section 01550 – Access Roads, Parking Areas and Parking Controls

C. Section 01560 – Temporary Barriers and Closures

D. Section 07180 – Traffic Coatings

E. Section 09910 – Traffic Stripping and Painting

1.03 SUBMITTALS

A. Contractor shall submit the following items to the AR prior to construction:
   1. A copy of the applicator's certification issued by the manufacturer.
   2. Product Data: Submit the sealer manufacturer's technical data sheets and LEED product information for each product. Include generic description, surface preparation and application instructions.
   3. MSDS Sheets indicating safety precautions.
   4. Manufacturer's Quality Assurance: Submit manufacturer's certification that coatings comply with specified requirements and are suitable for intended application.
   5. Warranty: Submit manufacturer's standard warranty form with authorized signatures and endorsements.
   6. Submit list of project references as documented in this Specification under Quality Assurance Article. Include contact name and phone number of person charged with oversight of each project.
   7. Quality Control Submittals:
      a. Provide protection plan of surrounding areas and non-work surfaces.

1.04 QUALITY ASSURANCE

A. Comply with Section 01400.

B. Qualifications:
   1. Manufacturer Qualifications: Company with minimum 15 years of experience in manufacturing of specified products.
   2. Manufacturer Qualifications: Company shall be ISO 9001:2000 Certified.
   3. Manufacturer shall be able to demonstrate successful performance on comparable projects.
   4. Applicator Qualifications: Company with minimum of 5 years experience in application of specified products on projects of similar size and scope, and is acceptable to product manufacturer.
      a. Successful completion of a minimum of 5 projects of similar size and complexity to specified Work.
      b. Applicator will be a licensed Applicator of the manufacturer of the specified product who has completed a formal program of instruction in the use of the specified water repellant coating system.
      c. Applicator will provide certification attesting to their Licensed Applicator status at time of bid.

C. Pre-application Meeting: Convene a pre-application meeting two (2) weeks before start of application of coating systems. Require attendance of parties directly affecting work of this section, including Contractor, Quality Control Engineer, applicator, and manufacturer's representative. Review the following:
   1. Environmental requirements.
   2. Protection of surfaces not scheduled to be coated.
   3. Surface preparation.
   4. Application.
   5. Repair.
   6. Field quality control.
   7. Cleaning.
   8. Protection of coating systems.
   9. Coordination with other work.

D. Field Sample:
   1. Install at Project site or pre-selected area of building an area for field sample (mock-up), as directed by Quality Control Engineer or AR.
      a. Provide mockup of at least Five (5) by Five (5) feet minimum to include surface preparation, sealant joint, and juncture details and allow for evaluation of repellent performance and finish.
      b. Mock-up Substrate: Horizontal concrete surfaces.
      c. Maintain mock-up during construction for workmanship standard.
      d. Mock-up may be incorporated into final construction upon Quality Control Engineer/AR approval.
      e. Field sample will be standard for judging workmanship on remainder of Project.

f. Obtain Quality Control Engineer or AR written approval of field sample before start of material application, including approval of aesthetics, color, texture, and appearance.
g. Conduct absorption test on cured field sample. Adjust application until required repellent performance is achieved.
h. Apply material in accordance with manufacturer's written application instructions.

2. Manufacturer's representative or designated representative will review technical aspects; surface preparation, application, and workmanship.

1.05 DELIVERY, STORAGE, AND HANDLING

A. Deliver, store, handle and protect all products in accordance with the manufacturer's recommendations.

B. Comply with manufacturer's ordering instructions and lead-time requirements to avoid construction delays.

C. Deliver materials in manufacturer's original, unopened, undamaged containers with identification labels intact.

D. Store in unopened containers in clean, dry area between 35 degrees F (2 degrees C) and 110 degrees F (43 degrees C).

1.06 PROJECT CONDITIONS

A. Environmental Requirements:
1. In accordance with manufacturer's recommendations, substrate and ambient temperature shall be 40 degrees F (4 degrees C) and rising at installation time and remain above 40 degrees F for at least 12 hours after installation.
2. Weather Conditions: In accordance with manufacturer's instructions, do not apply water repellents in snow, rain, or mist, or when such conditions are expected. Allow surfaces to attain temperature ranges and conditions recommended by manufacturer before proceeding with installation. Do not apply in rain or when rain is expected within 4 hours. Do not apply above 96 degrees F (35 degrees C) or below 40 degrees F (4 degrees C) or when temperatures are expected to fall below 20 degrees F (minus 7 degrees C) within 12 hours.
3. Compliance: Follow manufacturer's instructions with regard to safety, health, and other related environmental precautions. Comply with all applicable Federal, State, and Local Environmental Regulations.

B. Protection:
1. Warn personnel against breathing vapors and contact of materials with skin or eyes.
2. In confined areas workmen shall wear approved chemical-cartridge type masks.
3. Wear protective clothing.

4. Keep products away from heat, sparks and flames. Do not allow use of spark producing equipment during application and until vapors are gone. Post "No Smoking" signs.

C. Construction:
1. Contractor shall perform all work while maintaining vehicular parking to site and within site that are not under construction in accordance with Section 01550 and Contract Drawings.
2. Contractor shall provide adequate signalization in accordance with Section 01560 and Contract Drawings.

1.07 REFERENCE STANDARDS

A. ICRI Guideline No. 03732 – “Selecting and Specifying Concrete Surface Preparation for Sealers, Coatings, and Polymer Overlays”, January 1997.

PART 2 PRODUCTS

2.01 MANUFACTURERS

A. Subject to compliance with requirements, provide products from the following manufacturers:
1. BASF Building Systems:
889 Valley Park Drive
Shakopee, MN 55379
Customer Service: 800-433-9517
Technical Service: 800-243-6739
Direct Phone: 952-496-6000
Internet: www.BASFbuildingsystems.com

2. Vexcon Chemicals Inc.
7240 State Road
Philadelphia, PA 19135
Customer Service: 888-839-2661
Internet: www.vexcon.com

3. Or approved equal.

B. Specifications and Drawings are based on manufacturer's proprietary literature from BASF Building Systems. Other manufacturers shall comply with minimum levels of material and detailing indicated in Specifications or on Drawings. AR will be sole judge of appropriateness of substitutions.

2.02 MATERIALS

A. Clear, breathable, 100 percent alkylalkoxysilane penetrating sealer. Penetrates deeply and chemically reacts with concrete to form long-lasting water-repellent surface.
   1. Acceptable Product: MasterProtect H1001 by BASF Building Systems.
   2. Or approved equal.

2.03 PERFORMANCE REQUIREMENTS

A. Sealer shall have the following minimum performance:
   1. Active Alkylalkoxysilane Content by Weight: 100 percent.
   2. Penetration, average depth, depending upon substrate: 0.20 inch (5 mm).
   3. Surface Appearance After Application: Unchanged.
   4. Flash Point, SETA, IPA: 165 degrees F (12 degrees C).
   5. Waterproofing After Abrasion, Alberta Transportation and Utilities Type 1B, 225 sf. per gal. (5.6 m2/L): 88.4 percent.
   6. Resistance to Chloride:
      a. Criteria of 1.5 at 1/2 inch: Less than 0.2 lb. per cy.
      b. Criteria of 0.75 at 1 inch: 0.00 lb. per cy.
   7. Water Weight Gain, NCHRP 244 Series II Cube Test, 200 sf. per gal (5 m2/L): 86 percent, exceeds criteria.
   8. Absorbed Chloride, NCHRP 244 Series II Cube Test, 250 sf. per gal (5 m2/L): 96 percent.
   9. Absorbed Chloride, NCHRP 244 Series IV Southern Climate, 200 sf. per gal (5 m2/L): 98 percent, exceeds criteria.
   10. Moisture-Vapor Transmission Rate, OHD-L-35: 102 percent.

PART 3 EXECUTION

3.01 MANUFACTURER'S INSTRUCTIONS

A. Compliance: Comply with manufacturer's most recently published technical bulletins including installation instructions, substrate testing, and surface preparation and cleaning, and post installation testing.

3.02 EXAMINATION

A. Verify substrate conditions are acceptable for water repellent system installation accordance with manufacturer's instructions.
   1. General: Determine acceptable removal techniques for contaminants harmful to water repellent performance, such as dust, dirt, grease, oils, curing compounds, form release agents, laitance, efflorescence, existing films and other water repellent coatings.
   2. Concrete: Verify concrete substrates have cured to full load bearing capacity (14-28 days).

3.03 SURFACE PREPARATION

A. A. Surfaces to be treated will be cleaned of dust, dirt, oil, grease, coatings, debris and other contaminants in accordance with procedures outlined in Section 3.03 D

B. Perimeter of areas to be coated shall be masked, to avoid coating adjacent surfaces. Protect adjacent work areas and finish surfaces from damage during water repellent system installation.

C. All caulking, patching, and joint sealing shall be completed prior to application of the penetrating concrete sealer.

D. Prior to installation, clean substrates that could impair penetration or reaction of water repellent system. Coordinate cleaning and application to avoid contamination of newly treated surfaces. Prepare surfaces as follows:
   1. The slab surface shall be broom swept to remove heavy dust and/or debris. Soiled or grease stained surfaces to be sealed shall be cleaned with SureKlean degreaser and etch, as follows:
      a. Wet the area to be cleaned.
      b. Dilute degreaser and etch per the manufacturer’s specifications and apply to the stained areas by brush or spray.
      c. Allow solution to stand, then apply a second coat and scrub the area with a stiff bristle brush.
      d. Rinse the area with fresh water using low pressure water cleaning equipment.
      e. Repeat the applications as required to remove heavily oil and grease stains.
   2. Concrete surfaces to be sealed shall receive a light abrasive blasting to remove surface contaminants. Surface profile shall be CSP3 or CSP4 as defined by ICRI Guideline No. 03732.

E. Test and clean substrates in accordance with manufacturer's printed recommendations and the following National standards:
   1. ASTM 0 4258, Surface Cleaning Concrete for Coating.
   2. ASTM 0 4262, Test Method for pH of Chemically Cleaned Concrete.
   3. ASTM 0 4259, Abrading Concrete.

F. Substrates shall be clean, dry, sound, and free of contaminants detrimental to water repellent system performance.
   1. Remove contaminants by approved methods demonstrated at mock-up.
   2. Allow cleaned, damp, or water soaked surfaces to become totally dry before installation.
   3. Efflorescence, mold, and mildew shall be treated, neutralized and removed prior to water repellent installation.
   4. Do not apply sealer if standing water is visible on surface to be treated.

G. Protection: Protect plant life and surfaces to remain uncoated during application. Use drop cloths or masking as required.

H. Prepare surfaces in accordance with manufacturer's instructions.

3.04 APPLICATION

A. Coordinate application of water repellent with traffic striping and pavement markings as per Section 09910.

B. The coating shall be applied as packaged. Do not dilute or alter the material.

C. Apply transparent water repellent to properly prepared surfaces indicated. Apply water repellent within time restrictions after mixing and surface preparation as recommended by manufacturer.

D. Apply water repellent by low pressure spray techniques recommended by manufacturer. Spray equipment shall be equipped with solvent-resistant gaskets and hoses. Maintain the appropriate coverage rates as specified by the product manufacturer.

E. Caulking, patching, and expansion joint sealants shall be installed prior to application. Allow 6-12 hours for caulking and sealant materials to cure (or until they are set).

F. Surface, air, and materials temperatures should be maintained between 40 degrees F and 100 degrees F during the application process, or as specified by the manufacturer. Do not perform coating if temperature is expected to fall below 40 degrees F and within 12 hours after completion of application.

G. Surfaces to be treated must be dry. Do not apply if frost, ice, or standing water are visible on the surface to be treated.

H. Apply sealer in accordance with manufacturer's instructions.

I. Apply sealer, water-based products from the bottom up (on vertical surfaces) with total saturation providing an 8-12 inch controlled run down. For horizontal application, apply flood coat to saturation working to a wet edge. The product may be poured down followed by brooming with a medium, stiff bristle push broom or equivalent.

J. Apply water repellent material as demonstrated and approved at mock-up and not less than manufacturer's minimum recommended coverage rate. Coverage of approximately 100-200 square feet per gallon can be attained depending on substrate porosity, texture and profile.

K. Excess coating on the treated surfaces must be broomed out thoroughly until they completely penetrate.

L. Stir material thoroughly before and during application.

M. Apply even distribution of sealer.

N. Match approved samples for warrantable performance, appearance, and coverage. Remove, reapply or re-coat work not in compliance with Contract Documents or Manufacturer's Warranty Requirements.

O. Treated surfaces must be protected from rain and other water for a period of not less than eight (8) hours after application.

P. Treated surfaces must be protected from excessive foot and/or vehicular traffic for a period of not less than eight (8) hours after application, or until dry. Check for slip hazards before pedestrian and/or vehicular traffic is permitted on the surface.

3.05 FIELD QUALITY CONTROL

A. The Quality Control Engineer shall inspect surface preparation for compliance with this Section. Material application rates and the total quantity of material used on the work area shall be recorded. Average application rates per square foot of surface area shall be calculated and compared to that required. Additional coats shall be applied where the application rates are 5 percent or more less than the specified application rates.

B. Post Installation Testing: Owner reserves the right to complete recommended testing required by the manufacturer at completion of work to assure warranty requirements, and contract compliance are met.

3.06 CLEANING AND PROTECTION

A. Remove temporary coverings and protection of adjacent work areas. Remove over-spray from windows or areas not intended to be coated with hot soap-water solution.

B. Remove construction debris resulting from work.

C. Protect sealer from damage during construction.

END OF SECTION

REPAIR WORK ITEMS:

1. REMOVAL OF EXISTING STRUCTURAL DECK AND WALL EXPANSION JOINTS, CONCRETE REPAIR AT JOINTS, JOINT PREPARATION AND INSTALLATION OF NEW EXPANSION JOINTS SYSTEMS AS PER DET. 1/S-501 AND DET. 1/S-502 (APPROX. 425 LF).
2. SURFACE PREPARATION AND APPLICATION OF URETHANE TRAFFIC BEARING TOPPING AT ROOF LEVEL, STAIRWELLS, ELEVATOR LANDINGS, AND ABOVE OFFICE ROOMS. CONCRETE PREPARATION OF SHARP EDGES AND UNEVEN JOINTS BY METHOD OF GRINDING AS PER SHEET S-522 (APPROX. 183,000 SF).
3. REMOVAL OF EXISTING SEALANTS AT JOINTS BETWEEN DOUBLE TEE BEAM FLANGES, INTERFACE OF DOUBLE TEE BEAM FLANGES AND INVERTED TEE GIRDER, BASE OF COLUMNS, WALLS, REPAIR OF CONCRETE AT JOINTS, JOINT PREPARATION AND INSTALLATION OF NEW JOINT SEALANT AS PER DET. 1/S-503 AND 3/S-503 (APPROX. 21,900 LF).
4. REPAIR OF CONCRETE CRACKS BY METHOD OF EPOXY INJECTION AT TOPSIDE OF STRUCTURAL CONCRETE DECKS, SIDEWALK & ROADWAY, AND WALLS AS PER DET. 4/S-507 AND DET. 1/S-508.
5. REPAIR OF CONCRETE DYNAMIC CRACKS BY METHOD OF ROUTING AND APPLICATION OF BACKER ROD AND SEALANT AS PER DET. 3/S-507.
6. REMOVAL AND REPLACEMENT OF DETERIORATED AND SOUND CONCRETE AT STRUCTURAL SLABS, WALLS, BEAM, COLUMNS, PARAPET WALLS, CURBS AND SLAB ON GRADE AS INDICATED IN THE CONTRACT DRAWINGS AND AS DIRECTED BY QUALITY CONTROL ENGINEER OR A.R. AS PER DETAILS 3/S-505, 1/S-509, 3/S-509, 4/S-509.
7. CLEANING AND PRIMING OF EXISTING EXPOSED REINFORCING STEEL IN STRUCTURAL CONCRETE ELEMENTS AT UNDERSIDE SURFACES OF STRUCTURAL DECKS.
8. REPAIR OF CONCRETE THROUGH CRACKS BY EPOXY INJECTION AS PER DET. 3/S-506.
9. REPLACEMENT OF FLEXIBLE TRAFFIC DELINEATORS IN-KIND AS PER DET. 4/S-519.
10. REPLACEMENT OF BEARING PADS AT SUPPORT BRACKET ANGLES AT EXPANSION JOINT AS PER DET. 3/S-515.
11. REPLACEMENT OF PIPE BOLLARD ANCHOR BOLTS AS PER DET. 1/S-519.
12. CLEANING/REPAINTING OF PIPE BOLLARDS (APPROX. 130 LOC.).
13. REMOVAL, CLEANING, SAND BLASTING OF EXISTING CROSS WALK STRIPING, ADA ACCESS RAMPS AND TRAFFIC CONTROL STRIPING AND MARKINGS, & PREPARATION AND INSTALLATION OF NEW CROSS WALK STRIPING, ADA ACCESS RAMPS, AND TRAFFIC CONTROL STRIPING AS INDICATED IN THE CONTRACT DRAWINGS OR DIRECTED BY THE A.R. (APPROX. 600,000 SF FLOOR AREA).
14. CONCRETE REPAIR AT LIFTING POINTS AS PER DET. 1 & 2/S-511.
15. REPAIR OF CONCRETE SPALLS AT CONNECTION PLATE AS PER DET. 1/S-520.
16. REPAIR OF PATCHES AT SPANDREL BEAM CONNECTION PLATES IN STAIRWELL AS PER DET. 4/S-520.
17. POWERWASH SEEPAGE AREAS AT UNDERSIDE, AS PER SPECIFICATIONS.
18. REPLACEMENT OF DAMAGED SIGNS IN-KIND.
19. CLEANING/PAINTING OF DRAIN BODIES AND PIPES.
20. REPLACEMENT OF STORM DRAIN PIPES AS PER DET. 1/S-517.
21. CLEANING OF DRAIN
22. REPOINTING OF CRACKED MORTAR ON CMU WALL.
23. REPAIR OF CRACKED BLOCKS ON CMU WALL AS PER DET. 3/S-518.
24. REMOVAL OF LOOSE/DETACHED JOINT BACKER ROD (APPROX. 70 LOC.).
25. REPAIR OF DETERIORATED CONCRETE WASH AS PER DET. 3/S-508.
26. APPLICATION OF SILANE BASED WATER REPELLENT SEALER. (1)
27. APPLICATION OF ACRYLIC COATING ON LIGHTWALL AND SHEAR WALL (APPROX. 9000 SF).
28. REPAIR OF BROKEN CORNER OF DOUBLE TEE FLANGE AS PER SHEET S-512.
29. CLEANING/PAINTING OF PIPE GUARD RAILS.

GENERAL NOTES:

1. CONTRACTOR SHALL VERIFY ALL DIMENSIONS PRIOR TO PRODUCING SHOP DRAWINGS, FABRICATING COMPONENTS, OR ORDERING MATERIALS. ALL SHOP DRAWINGS SHALL SHOW DIMENSIONS FIELD VERIFIED BY THE CONTRACTOR.
2. SYMBOLS FOR CRACKS AND AREAS OF SPALLS AND DELAMINATIONS SHOWN ARE FOR LOCATIONS ONLY. USE LENGTHS OF CRACKS AND AREAS OF SPALLS AND DELAMINATIONS SHOWN NEXT TO SYMBOLS. DO NOT SCALE OFF DRAWINGS.
3. FOR REPAIR LEGENDS, SYMBOLS, AND ABBREVIATIONS, SEE DWG. G-102 AND G-103

GROSVENOR-STRATHMORE PARKING STRUCTURE QUANTITIES

REPAIR WORK ITEM	DESCRIPTION	QUANTITY	UNIT
1	REMOVAL AND REPLACEMENT OF EXISTING EXPANSION JOINTS	1	LS
2	APPLICATION OF URETHANE TRAFFIC BEARING TOPPING	1	LS
3	REMOVAL AND REPLACEMENT OF EXISTING JOINT SEALANTS AND CONCRETE REPAIR	1	LS
4	REPAIR OF CONCRETE CRACKS BY EPOXY INJECTION	2980	LF
5	REPAIR OF CONCRETE DYNAMIC CRACKS	1600	LF
6	REPAIR OF CONCRETE SPALLS AT TOPSIDE OF DECK AND WALLS	500	SF
7	CLEANING AND PRIMING OF EXPOSED STEEL AT UNDERSIDE OF DECK	5	SF
8	REPAIR OF CONCRETE THROUGH CRACKS BY EPOXY INJECTION	300	LF
9	REPLACEMENT OF FLEXIBLE TRAFFIC DELINEATORS	1	LOC
10	REPLACEMENT OF BEARING PADS AT EXPANSION JOINT	100	LOC
11	REPLACEMENT OF PIPE BOLLARD ANCHOR BOLTS	20	LOC
12	CLEANING/REPAINTING OF PIPE BOLLARDS	1	LS
13	CLEANING/REPAINTING OF PARKING STRIPING AND TRAFFIC MARKINGS	1	LS
14	CONCRETE REPAIR AT LIFTING POINTS	125	LOC
15	REPAIR OF CONCRETE SPALLS AT CONNECTION PLATE	6	LOC
16	REPAIR PATCHES AT SPANDREL BEAM CONNECTION PLATES IN STAIRWELL	40	LOC
17	POWERWASH SEEPAGE AREAS AT UNDERSIDE	518,000	SF
18	REPLACEMENT OF DAMAGED SIGNS	10	LOC
19	CLEANING/PAINTING OF DRAIN BODIES AND PIPES	120	LOC
20	REPLACEMENT OF STORM DRAIN PIPES	35	LF
21	CLEANING OF DRAIN	3	LOC
22	REPAIR OF STEP CRACKS ON CMU WALL	75	LF
23	REPAIR OF CRACKED BLOCKS ON CMU WALL	60	LOC
24	REMOVAL OF LOOSE/DETACHED JOINT BACKER ROD	1	LS
25	~~REPAIR OF DETERIORATED CONCRETE WASH~~	1	LOC
(1) 26	APPLICATION OF SILANE BASED WATER REPELLENT SEALER	1	LS
27	~~APPLICATION OF ACRYLIC COATING ON LIGHTWALL AND SHEAR WALL~~	1	LS
28	REPAIR OF BROKEN CORNER OF DOUBLE TEE FLANGE	1	LOC
29	CLEANING/PAINTING OF PIPE GUARD RAILS	1	LS

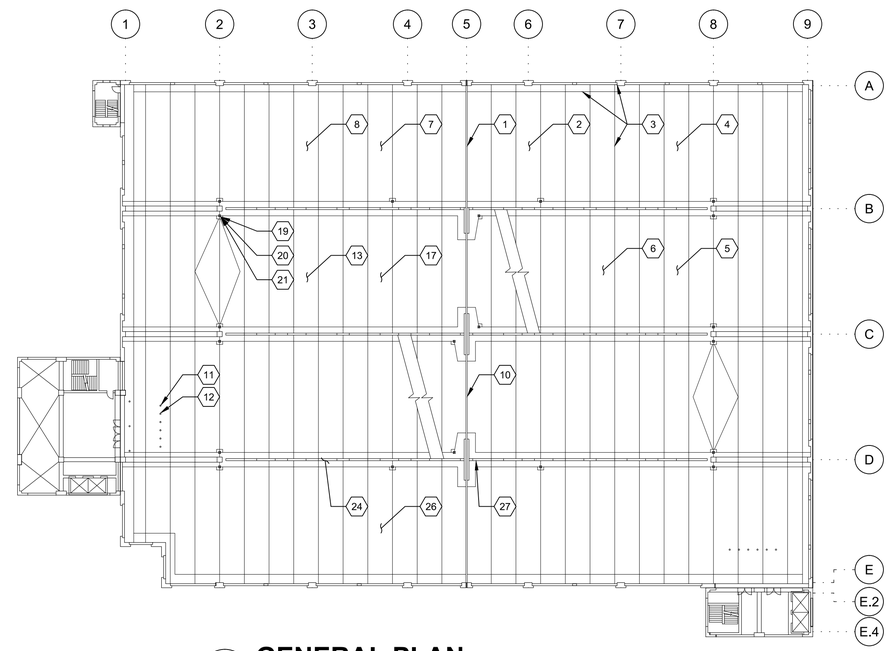

1 / - **GENERAL PLAN**
N.T.S.

NOTE: THIS DRAWING IS FOR INFORMATION ONLY. FOR A COMPLETE LISTING OF REPAIR ITEMS, SEE SPECIFICATIONS, DRAWINGS AND DETAIL PLANS.

CONTRACT NO. FQ15090

DESIGNED	L.K.	12/26/14 DATE
DRAWN	M.Z.	12/26/14 DATE
CHECKED	A.I.A.	12/26/14 DATE
APPROVED	J.D.P.	12/26/14 DATE

REFERENCE DRAWINGS

NUMBER	DESCRIPTION

REVISIONS

DATE	BY	DESCRIPTION
6/18/15	HI	REVISED DRAWING AM 2

PROFESSIONAL CERTIFICATION: I HEREBY CERTIFY THAT THESE DOCUMENTS WERE PREPARED OR APPROVED BY ME, AND THAT I AM A DULY LICENSED PROFESSIONAL ENGINEER UNDER THE LAWS OF THE STATE OF MARYLAND. LICENSE NO. 45732, EXPIRATION DATE 30 SEPT 2015

STATE OF MARYLAND ANTHONY I. ALEXIS 45732 PROFESSIONAL ENGINEER

WASHINGTON METROPOLITAN AREA TRANSIT AUTHORITY

OFFICE OF CHIEF, INFRASTRUCTURE SERVICES DEPARTMENT OF TRANSIT INFRASTRUCTURE AND ENGINEERING SERVICES

APPROVED
CHIEF ENGINEER DATE

GFP A Gannett Fleming/Parsons JOINT VENTURE

SUBMITTED
PROJECT MANAGER DATE

REHABILITATION OF WMATA PARKING FACILITIES
STRUCTURAL-GROSVENOR-STRATHMORE

CONSTRUCTION NOTES

SCALE	DRAWING NO.	SHEET NO.
AS SHOWN	A11P-S-001	M1269-25

S:\057459 WMATA\14-IRFQ-81 Four Parking Garages\CADD\Sheets\02_STRUCTURAL\01_GROSVENOR-STRATHMORE\A11P-S-001.dwg
SAVED 6/18/2015 4:20:21 PM by ANIKA, FARZANA I.
PLOTTED 6/18/2015 4:35:15 PM

REPAIR WORK ITEMS:

1. REMOVAL OF EXISTING STRUCTURAL DECK EXPANSION JOINTS, CONCRETE REPAIR AT JOINTS, JOINT PREPARATION AND INSTALLATION OF NEW EXPANSION JOINTS SYSTEMS AS PER DET. 4/S-501 (APPROX. 620 LF).
2. SURFACE PREPARATION AND APPLICATION OF URETHANE TRAFFIC BEARING TOPPING AT ROOF LEVEL, STAIRWELLS, ELEVATOR LANDINGS, AND ABOVE OFFICE ROOMS. CONCRETE PREPARATION OF SHARP EDGES AND UNEVEN JOINTS BY METHOD OF GRINDING AS PER SHEET S-522 (APPROX. 150,000 SF).
3. REMOVAL OF EXISTING SEALANTS AT JOINTS BETWEEN DOUBLE TEE BEAM FLANGES, INTERFACE OF DOUBLE TEE BEAM FLANGES AND INVERTED TEE GIRDER, BASE OF COLUMNS, WALLS, REPAIR OF CONCRETE AT JOINTS, JOINT PREPARATION AND INSTALLATION OF NEW JOINT SEALANT AS PER DET. 1/S-503 AND 3/S-503 (APPROX. 54,400 LF).
4. REPAIR OF CONCRETE CRACKS BY METHOD OF EPOXY INJECTION AT TOPSIDE AND UNDERSIDE OF STRUCTURAL CONCRETE DECKS, SIDEWALK & ROADWAY, AND WALLS AS PER DET. 1/S-507, 4/S-507, AND 1/S-508.
5. REPAIR OF CONCRETE DYNAMIC CRACKS BY METHOD OF ROUTING AND APPLICATION OF BACKER ROD AND SEALANT AS PER DET. 3/S-507.
6. REMOVAL AND REPLACEMENT OF DETERIORATED AND SOUND CONCRETE AT STRUCTURAL SLABS, WALLS, BEAM, COLUMNS, PARAPET WALLS, CURBS AND SLAB ON GRADE AS INDICATED IN THE CONTRACT DRAWINGS AND AS DIRECTED BY QUALITY CONTROL ENGINEER OR A.R. AS PER DETAILS 3/S-505, 1/S-509, 3/S-509, 4/S-509.
7. REMOVAL AND REPLACEMENT OF DETERIORATED AND SOUND CONCRETE AT UNDERSIDE OF STRUCTURAL SLAB AS PER DETAILS 1/S-510 AND 3/S-510.
8. REMOVAL AND REPLACEMENT OF DETERIORATED AND SOUND CONCRETE AT DOUBLE TEE BEAM WEB WITH EXPOSED REINFORCEMENT AS PER DETAIL 3/S-513.
9. CLEANING AND PRIMING OF EXISTING EXPOSED REINFORCING STEEL IN STRUCTURAL CONCRETE ELEMENTS AT UNDERSIDE SURFACES OF STRUCTURAL DECKS.
10. REPAIR OF CONCRETE THROUGH CRACKS BY EPOXY INJECTION AS PER DET. 3/S-506.
11. REPLACEMENT OF FLEXIBLE TRAFFIC DELINEATORS IN-KIND AS PER DET. 4/S-519.
12. REPLACEMENT OF BEARING PADS AT SUPPORT BRACKET ANGLES AT EXPANSION JOINT AS PER DET. 3/S-515.
13. REPLACEMENT OF PIPE BOLLARD ANCHOR BOLTS AS PER DET. 1/S-519.
14. CLEANING/REPAINTING OF PIPE BOLLARDS (APPROX. 160 LOC.).
15. REMOVAL AND REPLACEMENT OF CAULKING AT PIPE BOLLARD BASE PLATE.
16. REMOVAL, CLEANING, SAND BLASTING OF EXISTING CROSS WALK STRIPING, ADA ACCESS RAMPS AND TRAFFIC CONTROL STRIPING AND MARKINGS, & PREPARATION AND INSTALLATION OF NEW CROSS WALK STRIPING, ADA ACCESS RAMPS, AND TRAFFIC CONTROL STRIPING AS INDICATED IN THE CONTRACT DRAWINGS OR DIRECTED BY THE A.R. (APPROX. 72,000 SF FLOOR AREA).
17. CONCRETE REPAIR AT LIFTING POINTS AS PER DET. 1 & 2/S-511.
18. REMOVAL OF LOOSE CONCRETE AT STAIR BEAM CONNECTION PLATE COVER AS PER DET. 1/S-513.
19. REPAIR OF DOUBLE TEE FLANGE CONNECTION TO WALL AS PER DETAIL 1/S-514.
20. POWERWASH SEEPAGE AREAS AT UNDERSIDE, AS PER SPECIFICATIONS.
21. REPLACEMENT OF DAMAGED SIGNS IN-KIND.
22. REPLACEMENT OF DRAIN BODIES AND COVERS AS PER DET. 1/S-517.
23. REPLACEMENT OF STORM DRAIN PIPES AS PER DET. 1/S-517.
24. REPOINTING OF CRACKED MORTAR ON CMU WALL.
25. REPAIR OF CRACKED BLOCKS ON CMU WALL AS PER DET. 3/S-518.
26. REPAIR OF DETERIORATED CONCRETE WASH AS PER DET. 3/S-508.
27. APPLICATION OF SILANE BASED WATER REPELLENT SEALER
28. APPLICATION OF ACRYLIC COATING ON LIGHTWALL AND SHEAR WALL (APPROX. 28,000 SF).
29. REPAIR OF BROKEN CORNER OF DOUBLE TEE FLANGE AS PER SHEET S-512.
30. CLEANING AND PAINTING OF EXPOSED STEEL.
31. SMOOTH GRINDING OF CONCRETE AT UNEVEN JOINTS BETWEEN DOUBLE TEE BEAM FLANGES, REPAIR OF CONCRETE AT JOINTS, JOINT PREPARATION, AND INSTALLATION OF NEW JOINT SEALANT AS PER DET. 1/S-504.
32. REMOVAL AND REPLACEMENT OF VERTICAL JOINT SEALANT AS PER DET. 1/S-506.

SHADY GROVE NORTH PARKING STRUCTURE QUANTITIES

REPAIR WORK ITEM	DESCRIPTION	QUANTITY	UNIT
1	REMOVAL AND REPLACEMENT OF EXISTING EXPANSION JOINTS	1	LS
2	APPLICATION OF URETHANE TRAFFIC BEARING TOPPING	1	LS
3	REMOVAL AND REPLACEMENT OF EXISTING JOINT SEALANTS AND CONCRETE REPAIR	1	LS
4	REPAIR OF CONCRETE CRACKS BY EPOXY INJECTION	6600	LF
5	REPAIR OF CONCRETE DYNAMIC CRACKS	960	LF
6	REPAIR OF CONCRETE SPALLS AT TOPSIDE OF DECK AND WALLS	100	SF
7	REPAIR OF CONCRETE SPALLS AT UNDERSIDE OF DECK	5	SF
8	REPAIR OF CONCRETE SPALLS AT DOUBLE TEE BEAM WEB WITH EXPOSED REINFORCEMENT	35	SF
9	CLEANING AND PRIMING OF EXPOSED STEEL AT UNDERSIDE OF DECK	20	SF
10	REPAIR OF CONCRETE THROUGH CRACKS BY EPOXY INJECTION	520	LF
11	REPLACEMENT OF FLEXIBLE TRAFFIC DELINEATORS	2	LOC
12	REPLACEMENT OF BEARING PADS AT EXPANSION JOINT	105	LOC
13	REPLACEMENT OF PIPE BOLLARD ANCHOR BOLTS	3	LOC
14	CLEANING/REPAINTING OF PIPE BOLLARDS	1	LS
15	REMOVAL AND REPLACEMENT OF CAULKING AT BOLLARD BASE PLATE	320	LF
16	CLEANING/REPAINTING OF PARKING STRIPING AND TRAFFIC MARKINGS	1	LS
17	CONCRETE REPAIR AT LIFTING POINTS	25	LOC
18	REMOVAL OF LOOSE CONCRETE AT STAIR BEAM CONNECTION PLATE COVER	6	LOC
19	REPAIR FULL DEPTH OF DOUBLE TEE AT FLANGE CONNECTION	1	LOC
20	POWERWASH SEEPAGE AREAS AT UNDERSIDE	661,000	SF
21	REPLACEMENT OF DAMAGED SIGNS	13	LOC
22	REPLACEMENT OF STORM DRAIN BODIES AND COVERS	160	LOC
23	REPLACEMENT OF STORM DRAIN PIPES	3500	LF
24	REPAIR OF STEP CRACKS ON CMU WALL	20	LF
25	REPAIR OF CRACKED BLOCKS ON CMU WALL	3	LOC
~~26~~	~~REPAIR OF DETERIORATED CONCRETE WASH~~	1	LOC
1 27	APPLICATION OF SILANE BASED WATER REPELLENT SEALER	1	LS
~~28~~	~~APPLICATION OF ACRYLIC COATING ON LIGHTWALL AND SHEAR WALL~~	1	LS
29	REPAIR OF BROKEN CORNER OF DOUBLE TEE FLANGE	6	LOC
30	CLEANING/PAINTING OF EXPOSED STEEL	70	SF
31	SMOOTH GRINDING OF CONCRETE AT UNEVEN JOINTS	1	LS
32	REMOVAL AND REPLACEMENT OF VERTICAL JOINT SEALANTS	860	LF

GENERAL NOTES:

1. CONTRACTOR SHALL VERIFY ALL DIMENSIONS PRIOR TO PRODUCING SHOP DRAWINGS, FABRICATING COMPONENTS, OR ORDERING MATERIALS. ALL SHOP DRAWINGS SHALL SHOW DIMENSIONS FIELD VERIFIED BY THE CONTRACTOR.
2. SYMBOLS FOR CRACKS AND AREAS OF SPALLS AND DELAMINATIONS SHOWN ARE FOR LOCATIONS ONLY. USE LENGTHS OF CRACKS AND AREAS OF SPALLS AND DELAMINATIONS SHOWN NEXT TO SYMBOLS. DO NOT SCALE OFF DRAWINGS.
3. FOR REPAIR LEGENDS, SYMBOLS, AND ABBREVIATIONS, SEE DWG. G-102 AND G-103

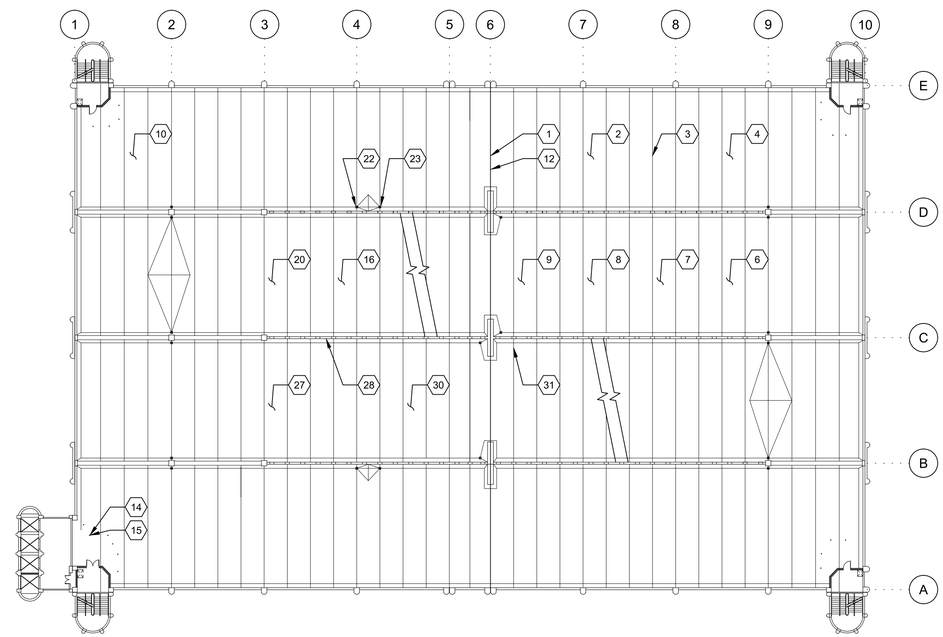

1 / - GENERAL PLAN
N.T.S.

NOTE: THIS DRAWING IS FOR INFORMATION ONLY. FOR A COMPLETE LISTING OF REPAIR ITEMS, SEE SPECIFICATIONS, DRAWINGS AND DETAIL PLANS.

CONTRACT NO. FQ15090

DESIGNED	L.K.	12/26/14 DATE
DRAWN	M.Z.	12/26/14 DATE
CHECKED	A.I.A.	12/26/14 DATE
APPROVED	J.D.P.	12/26/14 DATE

REFERENCE DRAWINGS

NUMBER	DESCRIPTION

REVISIONS

DATE	BY	DESCRIPTION
6/18/15	HI	REVISED DRAWING AM 2

PROFESSIONAL CERTIFICATION I HEREBY CERTIFY THAT THESE DOCUMENTS WERE PREPARED OR APPROVED BY ME, AND THAT I AM A DULY LICENSED PROFESSIONAL ENGINEER UNDER THE LAWS OF THE STATE OF MARYLAND. LICENSE NO. 45732. EXPIRATION DATE 6/18/2015

STATE OF MARYLAND — AMRI, ALI — 45732 — PROFESSIONAL ENGINEER

WASHINGTON METROPOLITAN AREA TRANSIT AUTHORITY

OFFICE OF CHIEF, INFRASTRUCTURE SERVICES DEPARTMENT OF TRANSIT INFRASTRUCTURE AND ENGINEERING SERVICES

APPROVED
CHIEF ENGINEER DATE

GFP A Gannett Fleming/Parsons JOINT VENTURE

SUBMITTED
PROJECT MANAGER DATE

REHABILITATION OF WMATA PARKING FACILITIES
STRUCTURAL-SHADY GROVE NORTH

CONSTRUCTION NOTES

SCALE: AS SHOWN
1 DRAWING NO. A15P-S-001
SHEET NO. M1269-97

S:\057459 WMATA\14-HRPG-81 Four Parking Garages\CADD\Sheets\02_STRUCTURAL\02_SHADY GROVE NORTH\A15P-S-001.dwg
SAVED 6/18/2015 4:20:19 PM by ANIKA. FARZANA I.
PLOTTED 6/18/2015 4:36:42 PM

REPAIR WORK ITEMS:

1. REMOVAL OF EXISTING STRUCTURAL DECK AND WALL EXPANSION JOINTS, CONCRETE REPAIR AT JOINTS, JOINT PREPARATION AND INSTALLATION OF NEW EXPANSION JOINTS SYSTEMS AS PER DET. 4/S–501 AND DET. 3/S–502 (APPROX. 290 LF).
2. SURFACE PREPARATION AND APPLICATION OF URETHANE TRAFFIC BEARING TOPPING AT ROOF LEVEL, STAIRWELLS, ELEVATOR LANDINGS, AND ABOVE OFFICE ROOMS. CONCRETE PREPARATION OF SHARP EDGES AND UNEVEN JOINTS BY METHOD OF GRINDING AS PER SHEET S–522 (APPROX. 110,100 SF).
3. REMOVAL OF EXISTING SEALANTS AT JOINTS BETWEEN DOUBLE TEE BEAM FLANGES, INTERFACE OF DOUBLE TEE BEAM FLANGES AND INVERTED TEE GIRDER, BASE OF COLUMNS, WALLS, REPAIR OF CONCRETE AT JOINTS, JOINT PREPARATION AND INSTALLATION OF NEW JOINT SEALANT AS PER DET. 1/S–503 AND DET. 3/S–503 (APPROX. 33,050 LF).
4. SMOOTH GRINDING OF CONCRETE AT UNEVEN JOINTS AT DOUBLE TEE BEAM FLANGES AND AT INVERTED TEE BEAMS AS PER DET. 1/S–504 AND DET. 3/S–504 (APPROX. 1750 LF).
5. REPAIR OF CONCRETE CRACKS BY METHOD OF EPOXY INJECTION AT TOPSIDE OF STRUCTURAL CONCRETE DECKS, SIDEWALK & ROADWAY, AND WALLS AS PER DET. 4/S–507 AND DET. 1/S–508.
6. REPAIR OF CONCRETE DYNAMIC CRACKS BY METHOD OF ROUTING AND APPLICATION OF BACKER ROD AND SEALANT AS PER DET. 3/S–507.
7. REMOVAL AND REPLACEMENT OF DETERIORATED AND SOUND CONCRETE AT STRUCTURAL SLABS, WALLS, BEAM, COLUMNS, PARAPET WALLS, CURBS AND SLAB ON GRADE AS INDICATED IN THE CONTRACT DRAWINGS AND AS DIRECTED BY QUALITY CONTROL ENGINEER OR A.R. AS PER DETAILS 3/S–505, 1/S–509, 3/S–509, 4/S–509.
8. REMOVAL OF LOOSE OR DETERIORATED CONCRETE AND CLEANING AND PRIMING OF EXISTING EXPOSED REINFORCING STEEL IN STRUCTURAL CONCRETE ELEMENTS AT UNDERSIDE SURFACES OF STRUCTURAL DECKS AS PER DET. 1/S–510 AND DET. 3/S–510.
9. CLEANING AND PRIMING OF EXISTING EXPOSED REINFORCING STEEL IN STRUCTURAL CONCRETE ELEMENTS AT UNDERSIDE SURFACES OF STRUCTURAL DECKS.
10. REMOVAL AND REPLACEMENT OF EXISTING VERTICAL CAULKING AS PER DET. 1/S–506.
11. REPAIR OF CONCRETE THROUGH CRACKS BY EPOXY INJECTION AS PER DET. 3/S–506.
12. REPLACEMENT OF FLEXIBLE TRAFFIC DELINEATORS IN–KIND AS PER DET. 5/S–519.
13. REPLACEMENT OF BEARING PADS AT SUPPORT BRACKET ANGLES AT EXPANSION JOINT AS PER DET. 3/S–515.
14. REPLACEMENT OF BEARING PADS AT DOUBLE TEE BEARING.
15. REPLACEMENT OF STEEL PIPE BOLLARD IN–KIND AS PER DET. 2/S–519.
16. REPLACEMENT OF PIPE BOLLARD ANCHOR BOLTS AS PER DET. 1/S–519.
17. REMOVAL, CLEANING, SAND BLASTING OF EXISTING CROSS WALK STRIPING, ADA ACCESS RAMPS AND TRAFFIC CONTROL STRIPING AND MARKINGS, & PREPARATION AND INSTALLATION OF NEW CROSS WALK STRIPING, ADA ACCESS RAMPS, AND TRAFFIC CONTROL STRIPING AS INDICATED IN THE CONTRACT DRAWINGS OR DIRECTED BY THE A.R. (APPROX. 419,000 SF FLOOR AREA).
18. CONCRETE REPAIR AT LIFTING POINTS AS PER DET. 1 & 2/S–511.
19. REPAIR OF CONCRETE SPALLS AT CONNECTION PLATE OR STAIR BEAM JOINT AS PER DET. 1/S–520 AND DET. 2/S–520.
20. REPAIR OF UNDERSIDE CONCRETE SPALLS AT CONNECTION PLATE 3/S–514.
21. POWERWASH SEEPAGE AREAS AT UNDERSIDE, AS PER SPECIFICATIONS.
22. REPLACEMENT OF DAMAGED SIGN IN–KIND.
23. REPLACEMENT OF SIGN ANCHOR BOLTS.
24. REPLACEMENT OF STORM DRAIN COVER, AS PER DET. 1/S–517.
25. REPAIR OF CRACK ON CMU WALL AS PER DET. 3/S–518.
26. REMOVAL OF LOOSE/DETACHED JOINT BACKER ROD (APPROX. 100 LOC.).
27. APPLICATION OF SILANE BASED WATER REPELLENT SEALER. (1)

GENERAL NOTES:

1. CONTRACTOR SHALL VERIFY ALL DIMENSIONS PRIOR TO PRODUCING SHOP DRAWINGS, FABRICATING COMPONENTS, OR ORDERING MATERIALS. ALL SHOP DRAWINGS SHALL SHOW DIMENSIONS FIELD VERIFIED BY THE CONTRACTOR.
2. SYMBOLS FOR CRACKS AND AREAS OF SPALLS AND DELAMINATIONS SHOWN ARE FOR LOCATIONS ONLY. USE LENGTHS OF CRACKS AND AREAS OF SPALLS AND DELAMINATIONS SHOWN NEXT TO SYMBOLS. DO NOT SCALE OFF DRAWINGS.
3. FOR REPAIR LEGENDS, SYMBOLS, AND ABBREVIATIONS, SEE DWG. G–102 AND G–103

COLLEGE PARK PARKING STRUCTURE QUANTITIES

REPAIR WORK ITEM	DESCRIPTION	QUANTITY	UNIT
1	REMOVAL AND REPLACEMENT OF EXISTING EXPANSION JOINTS	1	LS
2	APPLICATION OF URETHANE TRAFFIC BEARING TOPPING	1	LS
3	REMOVAL AND REPLACEMENT OF EXISTING JOINT SEALANTS AND CONCRETE REPAIR	1	LS
4	SMOOTH GRINDING OF CONCRETE AT UNEVEN JOINTS	1	LS
5	REPAIR OF CONCRETE CRACKS BY EPOXY INJECTION	1960	LF
6	REPAIR OF CONCRETE DYNAMIC CRACKS	45	LF
7	REPAIR OF CONCRETE SPALLS AT TOPSIDE OF DECK AND WALLS	115	SF
8	REPAIR OF CONCRETE SPALLS AT UNDERSIDE OF DECK	50	SF
9	CLEANING AND PRIMING OF EXPOSED STEEL AT UNDERSIDE OF DECK	40	SF
10	REMOVAL AND REPLACEMENT OF EXISTING VERTICAL CAULKING	180	LF
11	REPAIR OF CONCRETE THROUGH CRACKS BY EPOXY INJECTION	20	LF
12	REPLACEMENT OF FLEXIBLE TRAFFIC DELINEATORS	4	LOC
13	REPLACEMENT OF BEARING PADS AT EXPANSION JOINT	48	LOC
14	REPLACEMENT OF BEARING PADS AT DOUBLE TEE BEAM BEARING	2	LOC
15	INSTALLATION OF STEEL PIPE BOLLARDS	4	LOC
16	REPLACEMENT OF PIPE BOLLARD ANCHOR BOLTS	20	LOC
17	CLEAN/REPAINT PARKING STRIPING AND TRAFFIC MARKINGS	1	LS
18	CONCRETE REPAIR AT LIFTING POINTS	1	LOC
19	REPAIR OF CONCRETE SPALLS AT CONNECTION PLATE OR STAIR BEAM JOINT	56	LOC
20	REPAIR OF CONCRETE SPALLS AT CONNECTION PLATE AT UNDERSIDE	5	SF
21	POWERWASH SEEPAGE AREAS AT UNDERSIDE	1400	SF
22	REPLACEMENT OF DAMAGED SIGN	1	LOC
23	REPLACEMENT OF SIGN ANCHOR BOLTS	6	LOC
24	REPLACEMENT OF STORM DRAIN COVER	1	LOC
25	REPAIR OF CRACK ON CMU WALL	5	LF
~~26~~	~~REMOVAL OF LOOSE/DETACHED JOINT BACKER ROD~~	100	LOC
27 (1)	APPLICATION OF SILANE BASED WATER REPELENT SEALER	1	LS

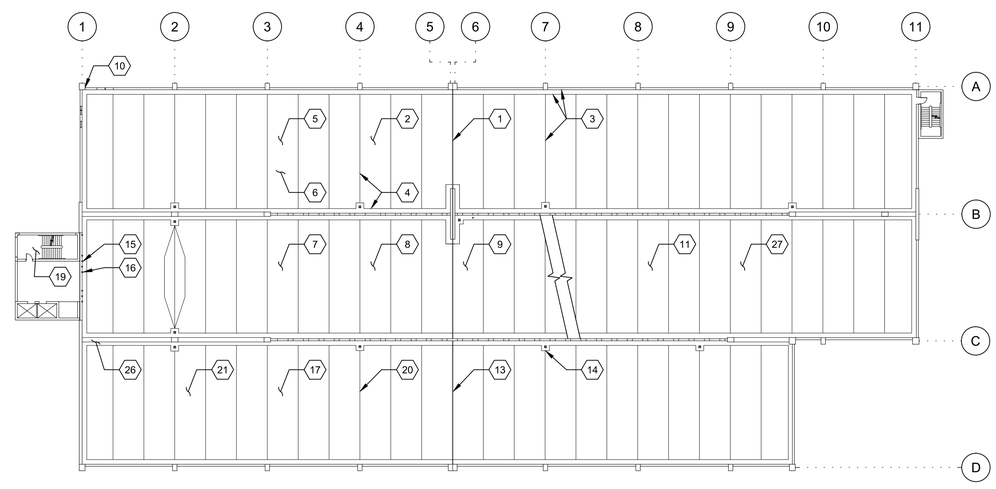

GENERAL PLAN
1 / -
N.T.S.

NOTE: THIS DRAWING IS FOR INFORMATION ONLY. FOR A COMPLETE LISTING OF REPAIR ITEMS, SEE SPECIFICATIONS, DRAWINGS AND DETAIL PLANS.

CONTRACT NO. FQ15090

DESIGNED	L.K.	12/26/14 DATE
DRAWN	M.Z.	12/26/14 DATE
CHECKED	A.I.A.	12/26/14 DATE
APPROVED	J.D.P.	12/26/14 DATE

REFERENCE DRAWINGS

NUMBER	DESCRIPTION

REVISIONS

DATE	BY	DESCRIPTION
6/18/15	HI	REVISED DRAWING AM 2

PROFESSIONAL CERTIFICATION I HEREBY CERTIFY THAT THESE DOCUMENTS WERE PREPARED OR APPROVED BY ME, AND THAT I AM A DULY LICENSED PROFESSIONAL ENGINEER UNDER THE LAWS OF THE STATE OF MARYLAND LICENSE NO. 45732. EXPIRATION DATE 31 DEC 2015

STATE OF MARYLAND — AMR I. ALY KAMEL — 45732 — PROFESSIONAL ENGINEER

WASHINGTON METROPOLITAN AREA TRANSIT AUTHORITY

OFFICE OF CHIEF, INFRASTRUCTURE SERVICES DEPARTMENT
OF TRANSIT INFRASTRUCTURE AND ENGINEERING SERVICES

APPROVED
CHIEF ENGINEER DATE

GFP A Gannett Fleming/Parsons JOINT VENTURE

SUBMITTED
PROJECT MANAGER DATE

REHABILITATION OF WMATA PARKING FACILITIES
STRUCTURAL–COLLEGE PARK

CONSTRUCTION NOTES

SCALE: AS SHOWN
DRAWING NO. E09P–S–001
SHEET NO. M1269–174

S:\057459 WMATA\114-RPCS-81 Four Parking Garages\CADD\Sheets\02_STRUCTURAL\03_COLLEGE PARK\E09P-S-001.dwg
SAVED 6/18/2015 3:05:31 PM by ANIKA, FARZANA I.
PLOTTED 6/18/2015 4:36:54 PM

REPAIR WORK ITEMS:

1. REMOVAL OF EXISTING STRUCTURAL DECK EXPANSION JOINTS, CONCRETE REPAIR AT JOINTS, JOINT PREPARATION AND INSTALLATION OF NEW EXPANSION JOINTS SYSTEMS AS PER DET. 4/S-501 (APPROX. 150 LF).
2. SURFACE PREPARATION AND APPLICATION OF URETHANE TRAFFIC BEARING TOPPING AT ROOF LEVEL, STAIRWELLS, ELEVATOR LANDINGS, AND ABOVE OFFICE ROOMS. CONCRETE PREPARATION OF SHARP EDGES AND UNEVEN JOINTS BY METHOD OF GRINDING AS PER SHEET S-522 (APPROX. 100,000 SF).
3. REMOVAL OF EXISTING SEALANTS AT JOINTS BETWEEN DOUBLE TEE BEAM FLANGES, INTERFACE OF DOUBLE TEE BEAM FLANGES AND INVERTED TEE GIRDER, BASE OF COLUMNS, WALLS, REPAIR OF CONCRETE AT JOINTS, JOINT PREPARATION AND INSTALLATION OF NEW JOINT SEALANT AS PER DET. 1/S-503 AND 3/S-503 (APPROX. 28,000 LF).
4. REPAIR OF CONCRETE CRACKS BY METHOD OF EPOXY INJECTION AT TOPSIDE AND UNDERSIDE OF STRUCTURAL CONCRETE DECKS, SIDEWALK & ROADWAY, AND WALLS AS PER DET. 1/S-507, 4/S-507, AND 1/S-508.
5. REPAIR OF CONCRETE DYNAMIC CRACKS BY METHOD OF ROUTING AND APPLICATION OF BACKER ROD AND SEALANT AS PER DET. 3/S-507.
6. REMOVAL AND REPLACEMENT OF DETERIORATED AND SOUND CONCRETE AT STRUCTURAL SLABS, WALLS, BEAM, COLUMNS, PARAPET WALLS, CURBS AND SLAB ON GRADE AS INDICATED IN THE CONTRACT DRAWINGS AND AS DIRECTED BY QUALITY CONTROL ENGINEER OR A.R. AS PER DETAILS 3/S-505, 1/S-509, 3/S-509, 4/S-509.
7. REMOVAL AND REPLACEMENT OF DETERIORATED AND SOUND CONCRETE AT UNDERSIDE OF STRUCTURAL SLAB AS PER DETAILS 1/S-510 AND 3/S-510.
8. REMOVAL AND REPLACEMENT OF DETERIORATED AND SOUND CONCRETE AT DOUBLE TEE BEAM WEB WITH EXPOSED REINFORCEMENT AS PER DETAIL 3/S-513.
9. CLEANING AND PRIMING OF EXISTING EXPOSED REINFORCING STEEL IN STRUCTURAL CONCRETE ELEMENTS AT UNDERSIDE SURFACES OF STRUCTURAL DECKS.
10. REPAIR OF CONCRETE THROUGH CRACKS BY EPOXY INJECTION AS PER DET. 3/S-506.
11. REPLACEMENT OF FLEXIBLE TRAFFIC DELINEATORS IN-KIND AS PER DET. 5/S-519.
12. REPLACEMENT OF BEARING PADS AT SUPPORT BRACKET ANGLES AT EXPANSION JOINT AS PER DET. 3/S-515.
13. REPLACEMENT OF PIPE BOLLARD ANCHOR BOLTS AS PER DET. 1/S-519.
14. REPAIR OF PIPE BOLLARDS AS PER DET. 2/S-519.
15. REMOVAL, CLEANING, SAND BLASTING OF EXISTING CROSS WALK STRIPING, ADA ACCESS RAMPS AND TRAFFIC CONTROL STRIPING AND MARKINGS, & PREPARATION AND INSTALLATION OF NEW CROSS WALK STRIPING, ADA ACCESS RAMPS, AND TRAFFIC CONTROL STRIPING AS INDICATED IN THE CONTRACT DRAWINGS OR DIRECTED BY THE A.R. (APPROX. 506,000 SF FLOOR AREA).
16. CONCRETE REPAIR AT LIFTING POINTS AS PER DET. 1 & 2/S-511.
17. POWERWASH SEEPAGE AREAS AT UNDERSIDE, AS PER SPECIFICATIONS.
18. REPLACEMENT OF DAMAGED SIGNS IN-KIND.
19. TIGHTENING OF BOLTS AT SIGNPOST BASE.
20. REPLACEMENT OF DRAIN COVER AS PER DET. 1/S-517.
21. CLEANING AND PAINTING OF STORM DRAIN BODIES AND PIPES.
22. REPAIR OF CRACKED BLOCKS ON CMU WALL AS PER DET. 3/S-518.
23. APPLICATION OF SILANE BASED WATER REPELLENT SEALER. (1)
24. APPLICATION OF ACRYLIC COATING ON LIGHTWALL AND SHEAR WALL (APPROX. 2500 SF).
25. SMOOTH GRINDING OF CONCRETE AT UNEVEN JOINTS BETWEEN DOUBLE TEE BEAM FLANGES, REPAIR OF CONCRETE AT JOINTS, JOINT PREPARATION, AND INSTALLATION OF NEW JOINT SEALANT AS PER DET. 1/S-503 (APPROX. 1560 LF).
26. REMOVAL AND REPLACEMENT OF VERTICAL JOINT SEALANT AS PER DET. 1/S-506.
27. REPAIR BROKEN CONCRETE ISLAND AS PER DET. 4/S-511.
28. REPAIR CRACKED WELD AT CONNECTION PLATE AS PER DET. 1/S-515.

FRANCONIA-SPRINGFIELD PARKING STRUCTURE QUANTITIES

REPAIR WORK ITEM	DESCRIPTION	QUANTITY	UNIT
1	REMOVAL AND REPLACEMENT OF EXISTING EXPANSION JOINTS	1	LS
2	APPLICATION OF URETHANE TRAFFIC BEARING TOPPING	1	LS
3	REMOVAL AND REPLACEMENT OF EXISTING JOINT SEALANTS AND CONCRETE REPAIR	1	LS
4	REPAIR OF CONCRETE CRACKS BY EPOXY INJECTION	3840	LF
5	REPAIR OF CONCRETE DYNAMIC CRACKS	600	LF
6	REPAIR OF CONCRETE SPALLS AT TOPSIDE OF DECK AND WALLS	150	SF
7	REPAIR OF CONCRETE SPALLS AT UNDERSIDE OF DECK	5	SF
8	REPAIR OF CONCRETE SPALLS AT DOUBLE TEE BEAM WEB WITH EXPOSED REINFORCEMENT	35	SF
9	CLEANING AND PRIMING OF EXPOSED STEEL AT UNDERSIDE OF DECK	15	SF
10	REPAIR OF CONCRETE THROUGH CRACKS BY EPOXY INJECTION	110	LF
11	REPLACEMENT OF FLEXIBLE TRAFFIC DELINEATORS	6	LOC
12	REPLACEMENT OF BEARING PADS AT EXPANSION JOINT	3	LOC
13	REPLACEMENT OF PIPE BOLLARD ANCHOR BOLTS	6	LOC
14	REPAIR SPALLED CONCRETE BOLLARDS	6	LS
15	CLEANING/REPAINTING OF PARKING STRIPING AND TRAFFIC MARKINGS	1	LS
16	CONCRETE REPAIR AT LIFTING POINTS	4	LOC
17	POWERWASH SEEPAGE AREAS AT UNDERSIDE	342,000	SF
18	REPLACEMENT OF DAMAGED SIGNS	5	LOC
19	TIGHTENING OF BOLTS AT SIGNPOST BASE	2	LOC
20	REPLACEMENT OF STORM DRAIN COVER	1	LOC
21	CLEANING AND PAINTING OF DRAIN BODIES AND PIPES	90	LOC
~~22~~	~~REPAIR OF CRACKED BLOCKS ON CMU WALL~~	40	LOC
(1) 23	APPLICATION OF SILANE BASED WATER REPELLENT SEALER	1	LS
~~24~~	~~APPLICATION OF ACRYLIC COATING ON LIGHTWALL AND SHEAR WALL~~	1	LS
25	SMOOTH GRINDING OF CONCRETE AT UNEVEN JOINTS	1	LS
26	REMOVAL AND REPLACEMENT OF VERTICAL JOINT SEALANTS	200	LF
27	REPAIR OF BROKEN CONCRETE ISLAND	1	LOC
28	REPAIR OF CRACKED WELD AT CONNECTION PLATE	2	LOC

GENERAL NOTES:

1. CONTRACTOR SHALL VERIFY ALL DIMENSIONS PRIOR TO PRODUCING SHOP DRAWINGS, FABRICATING COMPONENTS, OR ORDERING MATERIALS. ALL SHOP DRAWINGS SHALL SHOW DIMENSIONS FIELD VERIFIED BY THE CONTRACTOR.
2. SYMBOLS FOR CRACKS AND AREAS OF SPALLS AND DELAMINATIONS SHOWN ARE FOR LOCATIONS ONLY. USE LENGTHS OF CRACKS AND AREAS OF SPALLS AND DELAMINATIONS SHOWN NEXT TO SYMBOLS. DO NOT SCALE OFF DRAWINGS.
3. FOR REPAIR LEGENDS, SYMBOLS, AND ABBREVIATIONS, SEE DWG. G-102 AND G-103

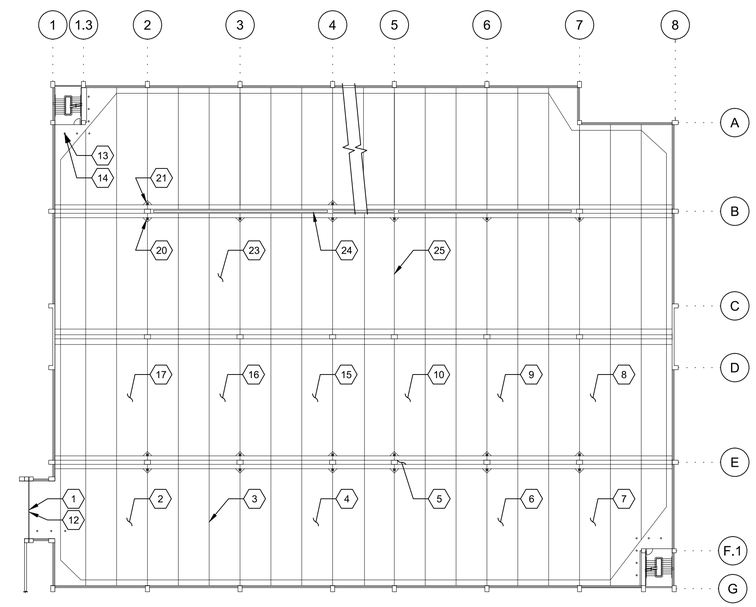

1 GENERAL PLAN
N.T.S.

NOTE: THIS DRAWING IS FOR INFORMATION ONLY. FOR A COMPLETE LISTING OF REPAIR ITEMS, SEE SPECIFICATIONS, DRAWINGS AND DETAIL PLANS.

CONTRACT NO. FQ15090

DESIGNED	L.K.	12/26/14 DATE
DRAWN	M.Z.	12/26/14 DATE
CHECKED	A.I.A.	12/26/14 DATE
APPROVED	J.D.P.	12/26/14 DATE

REFERENCE DRAWINGS

NUMBER	DESCRIPTION

REVISIONS

DATE	BY	DESCRIPTION
6/18/15	HI	REVISED DRAWING AM 2

COMMONWEALTH OF VIRGINIA — AMR IRANI — PROFESSIONAL ENGINEER

WASHINGTON METROPOLITAN AREA TRANSIT AUTHORITY

OFFICE OF CHIEF, INFRASTRUCTURE SERVICES DEPARTMENT OF TRANSIT INFRASTRUCTURE AND ENGINEERING SERVICES

APPROVED
CHIEF ENGINEER DATE

GFP A Gannett Fleming/Parsons JOINT VENTURE

SUBMITTED
PROJECT MANAGER DATE

REHABILITATION OF WMATA PARKING FACILITIES
STRUCTURAL-FRANCONIA-SPRINGFIELD (EAST)

CONSTRUCTION NOTES

SCALE	DRAWING NO.	SHEET NO.
AS SHOWN	J03P-S-001	M1269-213

S:\057459 WMATA\14-RPG-81 Four Parking Garages\CADD\Sheets\02_STRUCTURAL\04_FRANCONIA-SPRINGFIELD EAST\J03P-S-001.dwg
SAVED 6/18/2015 3:06:04 PM by ANIKA, FARZANA I.
PLOTTED 6/18/2015 4:37:10 PM

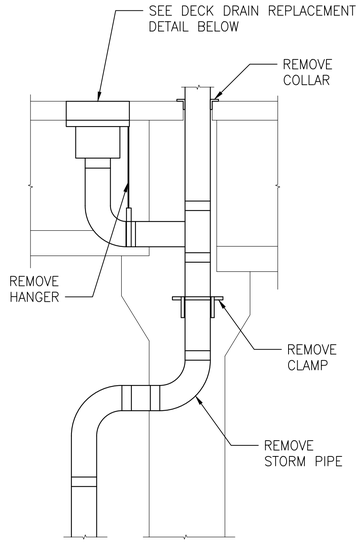

REMOVAL

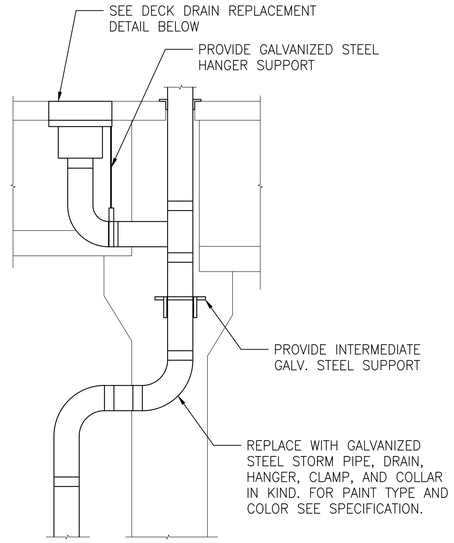

REPLACEMENT

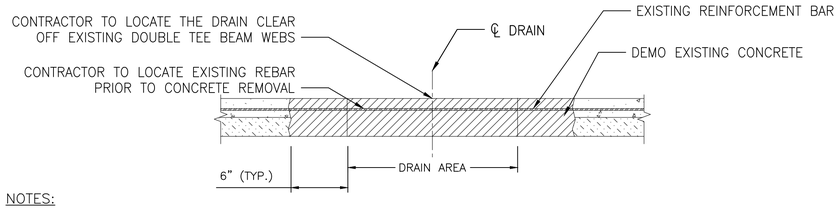

NOTES:

1. USE TYPE I OR TYPE 2 CONCRETE (Fc'=5000 PSI AT 28 DAYS).
2. USE DETAIL 1/S-517 FOR INSTALLATION OF NEW DRAINS AT ISOLATED LOCATIONS SHOWN ON PLANS.
3. REPLACEMENT DECK DRAIN SHALL BE ZURN Z534 HEAVY DUTY PARKING DECK DRAIN WITH SUPPORT FLANGE, OR APPROVED EQUAL.

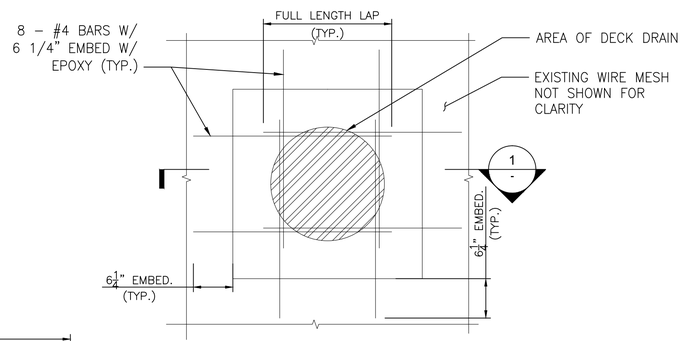

REPAIR

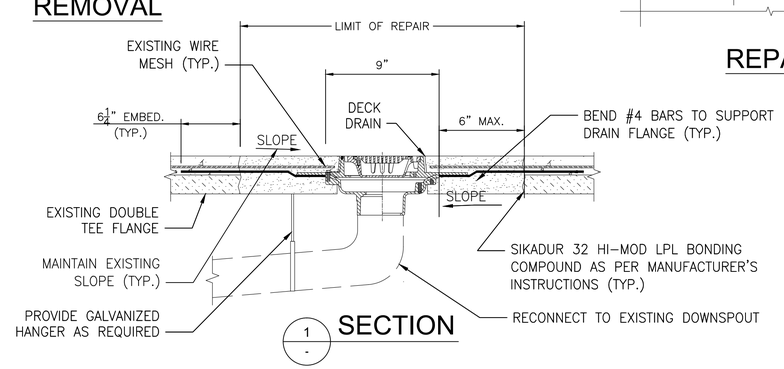

SECTION

1 / -

1 / S-517 TYPICAL STORM PIPE AND DRAIN REPLACEMENT DETAIL (GROSVENOR-STRATHMORE & SHADY GROVE ONLY)

N.T.S.

DRAWING REFERENCE: A15P-S-123

2 / S-517 CORRODED DRAIN BODY

N.T.S.

DRAWING REFERENCE: A15P-S-117

3 / S-517 CORRODED DOWNSPOUT

N.T.S.

COMMONWEALTH OF VIRGINIA
AMR IBRAHIM ALY
PROFESSIONAL ENGINEER

CONTRACT NO. FQ15090

DESIGNED	K.P.	12/26/14 DATE
DRAWN	M.Z.	12/26/14 DATE
CHECKED	A.I.A.	12/26/14 DATE
APPROVED	J.D.P.	12/26/14 DATE

REFERENCE DRAWINGS

NUMBER	DESCRIPTION

REVISIONS

DATE	BY	DESCRIPTION
6/18/15	HI	REVISED DRAWING AM 2

"PROFESSIONAL CERTIFICATION I HEREBY CERTIFY THAT THESE DOCUMENTS WERE PREPARED OR APPROVED BY ME, AND THAT I AM A DULY LICENSED PROFESSIONAL ENGINEER UNDER THE LAWS OF THE STATE OF MARYLAND LICENSE NO. 45732. EXPIRATION DATE 31 JANUARY 2016"

STATE OF MARYLAND
AMR I. ALY - ALY
45732
PROFESSIONAL ENGINEER

WASHINGTON METROPOLITAN AREA TRANSIT AUTHORITY

OFFICE OF CHIEF, INFRASTRUCTURE SERVICES DEPARTMENT OF TRANSIT INFRASTRUCTURE AND ENGINEERING SERVICES

APPROVED
CHIEF ENGINEER DATE

GFP A Gannett Fleming/Parsons JOINT VENTURE

SUBMITTED
PROJECT MANAGER DATE

REHABILITATION OF WMATA PARKING FACILITIES
STRUCTURAL–ALL FACILITIES

TYPICAL REPAIR DETAILS – 17

SCALE	DRAWING NO.	SHEET NO.
AS SHOWN	S-517	M1269-264

S:\057459 WMATA\14-RPCS-81 Four Parking Garages\CADD\Sheets\02_STRUCTURAL\00_COMMONS-517.dwg
SAVED 6/24/2015 11:26:06 AM by ANIKA, FARZANA I.
PLOTTED 6/24/2015 11:26:37 AM